Postal mail distribution: an approximation from the problem of the VRP

Marlene Del Ángel[1], Alberto Ochoa[2], Alberto Hernández[3], Jaime Del Ángel[1]

[1]Instituto Tecnológico Superior de Naranjos
[2]Maestría en Cómputo Aplicado, UACJ
[3]FCAeI, Universidad Autónoma del Estado de Morelos
[1]marlene.del.angel.perez@gmail.com, [2]jose_hernandez@uaem.mx,
[3]jose_hernandez@uaem.mx, [1]jaime.delangel@itsna.edu.mx

Abstract. This article discusses about the distribution of mail to CVRP (Capacitate vehicle routing problem) deals with the very frequent problem of the distribution of mail and parcels, in which is present the Bin Packing Problem and it is proposed approximate a solution using a nearest neighbor algorithm and ant colony, the problem of the distribution of mail is based on the problem that has in the routes which generating very slowly and delayed customer delivery time, and delay in the time of delivery to the customer. The delay is due to poor planning of routes and use of distribution units that many times is not exploit its maximum capacity, with the use of MATLAB and ant colony algorithm in C, it is possible to obtain a better solution for distribution of mail.

Keywords: VRP, Ant Colony, Postal mail, Bin Packing Problem

1 Introduction

In this paper we consider that the vehicles have a maximum capacity and the quantity of products demanded by customers is different. VRP or vehicle routing problem consist in getting a set of possible shorter routes with the use of vehicles with the lowest feasible size, so depart the depot and return to it, providing to a number of customers distributed geographically [2]. The Capacitated Vehicle Routing Problem was first mentioned by Dantzig [5], seeks to approximate the solution to a problem by taking into account the demand by customers, the number of customers and their location while it considers the number of vehicles that are counted, the maximum capacity of each. The VRP belongs to combinatorial optimization problems and is represented by graphs for routes, searching for the shortest possible path, the problem of vehicle routing could be adapted for several depots, routes with time windows or more carriers serving the same customer. In the vehicle routing in the actual application it is also considered that the space traveled: has factors such as traffic and road conditions, and common sense [1].

As part of VRP the CVRP or routing problem of trained vehicles is a variant based on the capacity of the vehicle, i.e. takes into account that each vehicle has a maximum charge capacity in the CVRP is known that every customer has a claim for products

that must be satisfied by the same vehicle, each customer is represented as a node on the route of the delivery vehicle [2]. In accordance with Rodriguez [2]: “The number of possible solutions grows exponentially with the number of nodes in the graph", i.e. as customers are older have a greater number of possible solutions, and the solution to these problems, the more customers it gets more complex by which only approximate and not exact optimal solution to the problem.

There are algorithms that solve the VRP, such as taboo search, ACO (Ant Colony Optimization), and metaheuristics. Applying a low MATLAB algorithm VRP can be given an optimal solution that is closest to the best solution, using the pair of Bin Packing, this problem has many applications in real life, for the CVRP that is uses to optimize the space each car charge without exceeding their maximum capacity, considering that each vehicle carries a maximum capacity according to the sizes of the packages is intended to optimize the vehicle routing problem together with its maximum charge capacity [8, 9].

The Mexican postal service (SEPOMEX) is one of the widely used services that handle the sending of documents, letters, gyres, advertising and packages. It has with tariffs for each category Shipping and logistics for the delivery of mail. To carry out its work has delivery vehicles for each geographical area according to the number of potential customers, and the size of the geographical area; vehicles are [10]: bicycles, motorcycles and pickup trucks, each of these vehicles have a capacity to transport mail and parcels. Packages and mail are stored to fill a delivery vehicle in relation to the area where they will be delivered, also it has a classification of services such as: next day two following days, deferred delivery and Express. SEPOMEX has service points, routes and ground circuits as well as a number of employees. Demand Postal Mail Service has variation in relation to the size of the population and the size of the geographic area where this is located, as well as competition of shipping service.

According to the newspaper "The Financial" Mexico Post reported in 2014 revenues of 2,550,000,000.00 pesos / MX, about $ 161,392,405.00 dollars USD. Thanks to the expansion of its coverage over 94% to 96% of the country's population, which achievement by establishing more offices in all states [11].

PROFECO [12] indicates that mails Mexico currently has a national coverage of 98 percent, has 2538 routes and ground circuits, and more than 27,000 service points, these office 1,411 are offices of customer service and 1,112 are service windows Express or MEXPOST.

The Mexican Postal Service (SEPOMEX) has expanded to serve customers who make up 98% of Mexico, coverage improved by the opening of new branches and routes, SEPOMEX is widely used for its low cost and safe shipping, packets arrive intact; against its downside is its slow service, shipping time of parcel reaches take up to two weeks, that is the time it takes office before being sent to their destination and time of transporting the package, this process can be two weeks from an unfavorable point is sent to clients since the express service takes up to 10 days to reach its destination, the same time it takes the normal shipments. In the case of postal and telephone bills packets do not arrive at their destination in small towns, with an algorithm based on an VRP and Bin Packing is intended to give a more approximate to the optimal solution, improving service quality [9, 11].

2 Motivations

There are different transportation providers for the mail postal, the companies most used besides of the Mexican Postal Service currently are: ESTAFETA, FedEx, Multipack, Redpack and DHL; these companies arose from the need for the arrived packets as soon as possible destination safely. Although the Mexican Postal Service expanded its network to meet the demand from throughout the country demand covers 60% for the lack of efficiency and effectiveness in the delivery of parcels and postal mails [11]. A big problem identified is sending packets longer routes when routes are less distance, which results in increased delivery time, as the second problem is that vehicles used have to return for packages surpassed capacity, due to poor planning when charge.

3 The Capacitated Vehicles Routing Problem for the distribution of postal mail

The Mexican Postal Service has the need to improve their delivery routes and space in containers of vehicles. There are electronic media such as e-mail, but the post has not fallen into disuse because of the formality needed for some types of documents and different packaging, route planning or the Vehicle Routing Problem is a problem in NP-hard who seeks a good solution in a short period of time, this problem is compounded when considering the capacity of the containers in the case of distribution of products, which is known as the Bin Packing Problem, these problems arise from two main needs: 1) minimize costs by sharing products with shorter paths and 2) minimize transportation costs of products, making vehicles under the maximum amount of products distribute without exceeding their maximum load [6, 8]. So that we have the following restrictions

Table 1. Restrictions for the distribution of postal mail, (their own)

Restrictions for the distribution of postal mail			
Position of the depot	Secondary Offices	Distance from the client	Capacity of the vehicle

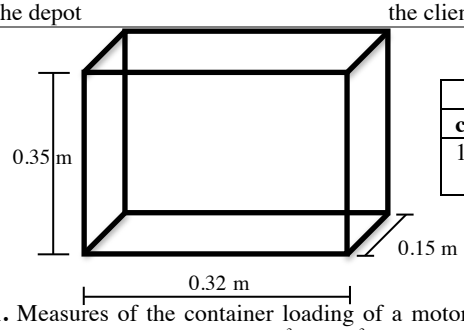

Capacity	
cm^3	**m^3**
16800	0.0168

Fig. 1. Measures of the container loading of a motorcycle, shows the action and its maximum capacity expressed in cm^3 and m^3.

The size of the container that is taken reference is a motorcycle, the measures are:

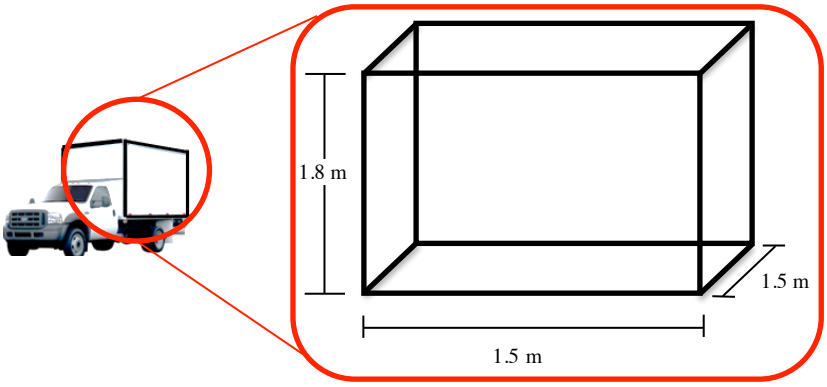

Capacity		
cm^3	m^3	Peso Kg
4050000	4.05	1000

Fig. 2. Measures of the cargo container of a truck, shows the measures and their maximum capacity in cm^3, m^3 and kilograms.

On transport between offices, transport units are trucks with the following measures:

According to the size of the letters and packages average sent these measures in volume are:

Table 2. Size of letters and packages (own source)

Shipping	**Weight (grams)**	**Volume (m^3)**
Letter 11.4x16.2x0.2	20	0.036
Envelop 45.8x32.4x0.2	20-500	0.445
Package 10x10x10	500-1000	0.10
Package 12x10x15	500-1000	0.18
Package 15x15x15	1000-2000	0.33

Measures to deliver the packages range from cards and letters to packages of not more than one kilogram of weight possess lower rates, shown in Table 3 have [10]. For packages changes the tariffs (see table 4):

Table 3. Price list for postal mails obtained of mails Mexico.

Weight in grams	20 gr.	40 gr.	60 gr.	80 gr.	100 gr.	200 gr.	300 gr.	400 gr.	500 gr.	1000 gr.
Tariff	$7.00	$7.50	$9.00	10.00	$12.50	$14.00	$15.50	$18.50	$21.00	$28.00

Table 4. Price list for small packages obtained from mail Mexico. [10]

Weight in grams	National Rate (MXN)
250	$ 31.00
250 a 500	$ 56.50
500 a 1000	$101.50
1000 a 2000	$167.00

The branches in the Morelos state are thirty-three, nine offices principal and main and twenty-four secondary offices (Fig. 3).

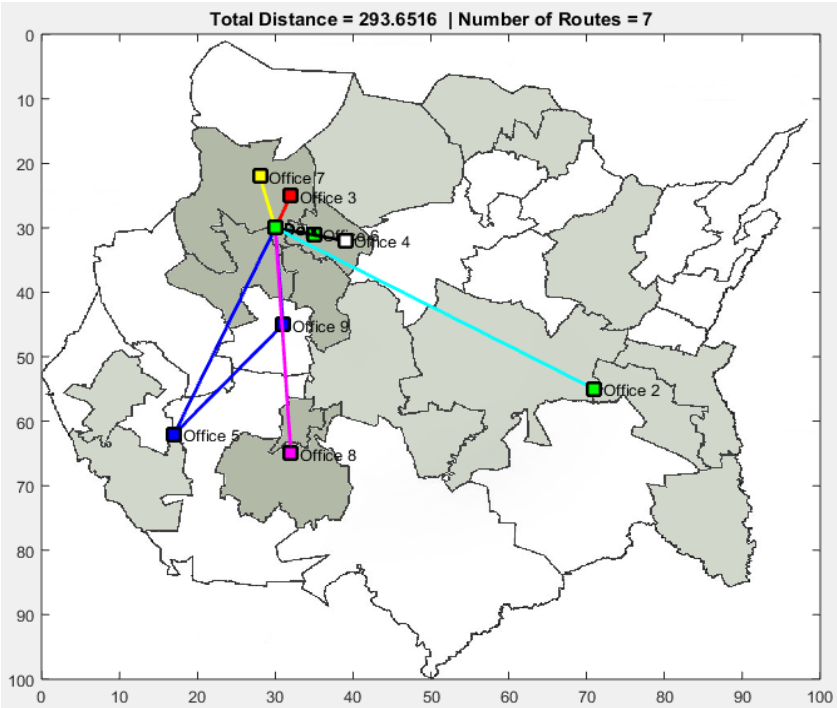

Fig. 3. The Offices from Morelos state and routes the central SEPOMEX secondary to the offices with the restriction of the demand for office.

4 Methodology

For the stroke of the routes of the central office to the rest of the offices of Postal Mail using the code of the nearest neighbor in MATLAB, this code looks for the nearest branch with priority to the increased demand. That is for creating paths on the basis of the demand for mail postal for each office.

Only for this case the algorithm does the following:

```
Start
Read array data (coordinates of offices)
Plot points in x, y
Trace routes of offices to another according to the de-
mand for products
Calculate the total route distance
Calculate the average travel time
End.
```

Distribution of the main and secondary offices of Morelos state (see fig. 4)

Table 5. The Offices in the Morelos state, located in x, y and demand for office [4, 11].

Office	X	Y	Demand
1	30.00	30.00	0.00
2	71.00	55.00	50.00
3	32.00	25.00	100.00
4	39.00	32.00	100.00
5	17.00	62.00	50.00
6	35.00	31.00	100.00
7	28.00	22.00	100.00
8	32.00	65.00	100.00
9	31.00	45.00	25.00

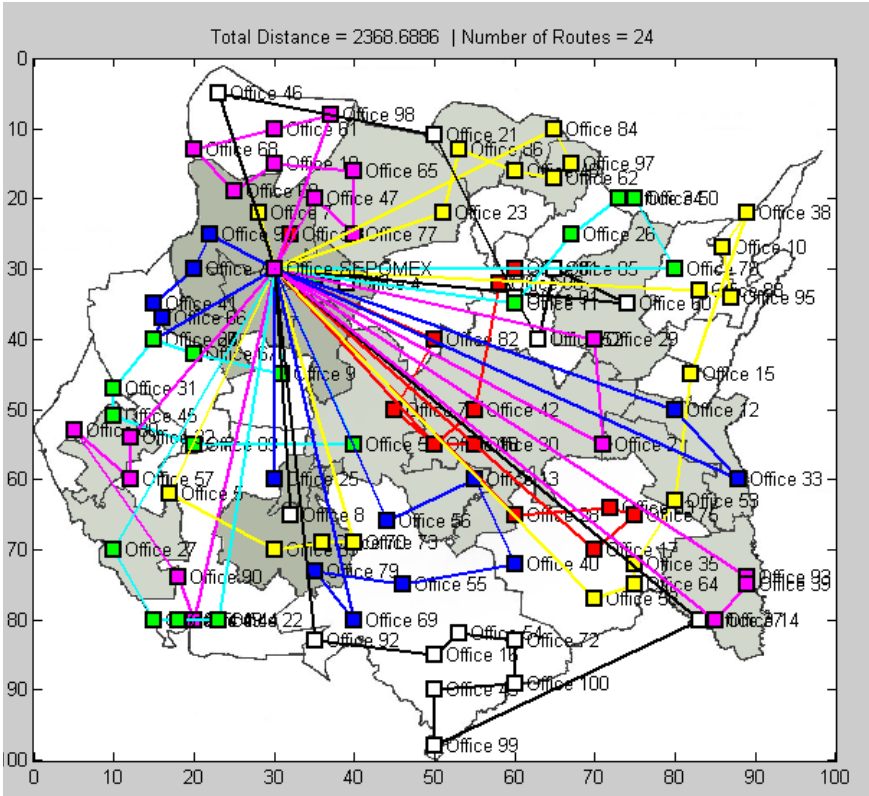

Fig. 4. Offices of Morelos state, with routes SEPOMEX the central office to second offices with the restriction of demand for office.

5 Design of Experiments (DOE) with the algorithm ant colony to VRP

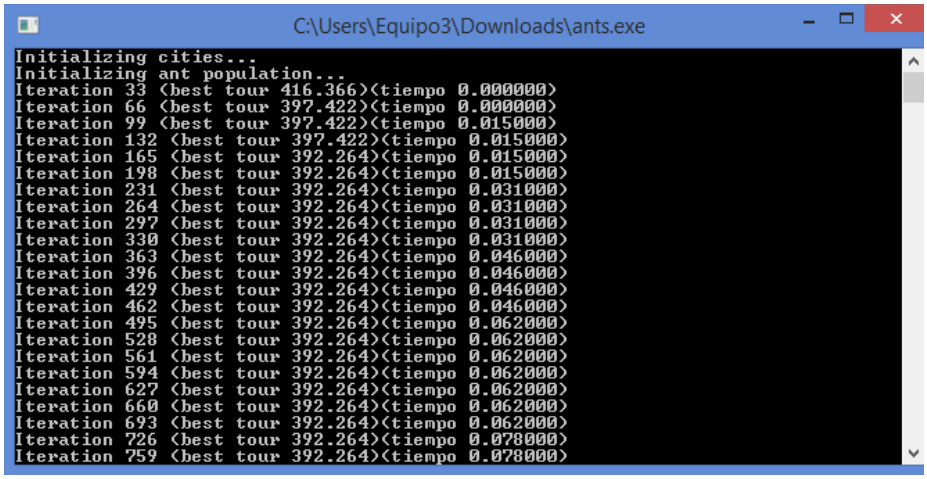

Fig. 5. Implementation of ant colony algorithm in C language.

6 Results of the program execution ant colony

Table 6. Results with respect to the variables, beta=1, Rho=0.9 and n° ants=60 %

100 offices
60% of ants
Beta = 1
Rho = 0.9

Number of executions	Iteration	Results	Time
1	7300	707.537	20.481
2	5000	720.195	14.280
3	5300	709.106	15.309
4	3000	727.979	8.674
5	5900	731.879	16.925
6	8400	710.110	23.845
7	6500	712.104	18.571
8	3500	699.435	10.317
9	5300	713.539	15.304
10	9200	736.2	26.033

Table 7. Results with respect to the variables: beta=1, Rho=0.95 and n° of ants=60%

100 offices
60% of ants
Beta = 1
Rho = 0.95

Number of executions	Iteration	Results	Time
1	5400	723.344	14.661
2	7800	729.6	22.211
3	3800	724.39	10.884
4	7700	714.143	22.046
5	3500	740.23	10.036
6	8100	735.666	22.898
7	4600	710.712	13.226
8	6700	723.899	19.059
9	5600	706.738	16.068
10	8300	705.188	23.559

Table 8. Results with respect to the variables: beta=5, Rho=0.9 y n° of ants= 60%

100 offices
60% of ants
Beta = 5
Rho = 0.9

Number of executions	Iteration	Results	Time
1	1300	694.446	6.215
2	1500	697.577	6.277
3	1500	699.487	4.070
4	1100	697.473	2.922
5	7100	695.644	19.139
6	700	692.687	1.875
7	2500	700.745	7.497
8	8700	696.378	23.222
9	1000	699.487	2.755
10	3500	697.577	9.447

Table 9. Results with respect to the variables: beta=5, Rho=0.95 y n° of ants=60 %

100 offices
60% of ants
Beta = 5
Rho = 0.95

Number of executions	Iteration	Results	Time
1	700	696.06	2.159
2	2500	694.446	6.602
3	300	697.043	0.842
4	900	694.446	2.549
5	300	694.263	2.505
6	3900	691.669	10.415
7	9200	693.829	24.091
8	600	694.446	1.657
9	1000	694.06	2.772
10	4000	695.381	10.750

Table 10. Results with respect to the variables: beta=1, Rho=0.9 y n° of ants= 80%

100 offices
80% of ants
Beta = 1
Rho=0.9

Number of executions	Iteration	Results	Time
1	2100	725.57	6.431
2	4800	713.31	13.812
3	4300	706.896	12.214
4	9200	713.984	25.443
5	3600	699.142	10.221
6	5400	691.133	15.357
7	6100	699.763	17.225
8	6700	742.962	19.066
9	9000	715.651	25.418
10	3400	707.183	9.581

Table 11. Results with respect to the variables: beta=1, Rho=0.95 y n° of ants=80 %

100 offices
80% of ants
Beta=1
Rho =0.95

Number of executions	Iteration	Results	Time
1	5000	726.108	14.377
2	6200	698.528	16.675
3	3000	726.07	8.527
4	3500	724.798	10.006
5	4400	728.345	12.811
6	3200	732.119	8.741
7	4300	731.301	12.469
8	2500	716.813	7.325
9	8900	730.993	25.333
10	5600	719.656	16.037

Table 12. Results with respect to the variables: beta=5, Rho=0.9 y n° of ants= 80%

100 offices
80% of ants
Beta = 5
Rho = 0.9

Number of executions	Iteration	Results	Time
1	9700	693.54	25.57
2	700	696.708	1.872
3	2800	701.407	7.429
4	1000	694.446	2.763
5	1000	694.12	2.696
6	1000	698.363	2.801
7	1600	699.487	4.418
8	1500	697.728	3.961
9	2300	697.322	6.171
10	3700	696.834	9.751

Table 13. Results with respect to the variables: beta=5, Rho=0.95 y n° of ants=80 %

100 offices
80% of ants
Beta = 5
Rho = 0.95

Number of executions	Iteration	Results	Time
1	3000	695.72	7.937
2	9400	698.984	25.373
3	600	695.372	1.637
4	6800	698.042	17.852
5	500	690.521	1.369
6	700	697.728	2.090
7	7500	696.91	19.648
8	1800	696.3	4.834
9	1600	697.577	4.163
10	600	695.973	1.807

Table 14. Results with respect to the variables: beta=1, Rho=0.9 y n° of ants = 100%

100 offices
100% of ants
Beta = 1
Rho = 0.9

Number of executions	Iteration	Results	Time
1	8100	733.946	55.523
2	2700	713.234	23.453
3	6100	723.923	53.88
4	4700	755.409	39.068
5	8300	731.155	78.016
6	5100	714.22	57.057
7	2400	739.622	7.394
8	4000	714.234	11.372
9	3200	715.642	9.438
10	7300	722.615	22.12

Table 15. Results with respect to the variables: beta=1, Rho=0.95 y n° of ants =100 %

100 offices
100% of ants
Beta = 1
Rho = 0.95

Number of executions	Iteration	Results	Time
1	6500	699.772	19.281
2	8200	706.316	14.926
3	9700	724.561	27.144
4	1300	742.035	2.583
5	4600	723.037	13.396
6	9500	693.822	26.644
7	8700	728.752	24.694
8	8900	721.947	25.584
9	7900	704.924	22.261
10	4600	713.064	12.745

Table 16. Results with respect to the variables: beta=5, Rho=0.9 y n° of ants= 100%

100 offices
100% of ants
Beta = 5
Rho = 0.9

Number of executions	Iteration	Results	Time
1	1200	694.446	3.650
2	1600	697.389	8.720
3	2800	697.577	9.578
4	600	694.446	4.477
5	1000	697.473	6.848
6	2700	696.834	11.044
7	1200	695.858	6.208
8	500	696.247	4.789
9	900	696.851	5.631
10	1100	694.446	6.068

Table 17. Results with respect to the variables: beta=5, Rho=0.95 y n° of ants =100 %

100 offices
100% of ants
Beta = 5
Rho = 0.95

Number of executions	Iteration	Results	Time
1	6200	699.899	23.556
2	600	699.456	3.322
3	1700	694.378	6.692
4	8000	696.834	23.680
5	1100	692.687	7.129
6	1100	689.605	5.397
7	1100	699.487	4.414
8	1600	693.691	10.311
9	900	694.983	4.040
10	7100	695.67	25.911

Table 18. Result the experiments with variation in Beta, Rho and percentage of ants.

%of ants	**Beta**	**Rho**	**Iteration**	**Results**	**Time**
60	1	0.9	3500	699.435	10.317
60	1	0.95	8300	705.188	23.559
60	5	0.9	1300	694.446	6.215
60	5	0.95	3900	691.669	10.415
80	1	0.9	5400	691.133	15.357
80	1	0.95	2500	716.813	7.325
80	5	0.9	9700	693.54	25.57
80	5	0.95	500	690.521	1.369
100	1	0.9	2700	713.234	23.453
100	1	0.95	9500	693.822	26.644
100	5	0.9	600	694.446	4.477
100	5	0.95	1100	689.605	5.397

7 Conclusions and future research

It was observed that the best result was obtained with 100% of ants represent vehicles, compared to experiment a similar result with 80% of ants was obtained, with this it is concluded that both results resources are optimized and that the VRP problems with routes and ant colony algorithm performs better in complex problems.

In this article were discussed the themes: VRP, CVRP, Bin Packing Problem, ant colony algorithm and nearest neighbor and the current state of mails Mexico, according to the results table to better plan their routes, the demand for deliveries to customers can be provided with 100% of the units to the 100 offices of Morelos state. Using the ant colony algorithm can verify the above, considering that the number of ants is the number of vehicle units.

As future work is to solve the problem of distribution the postal mail with Bin Packing, in the course of the unit, allowing the collection of packages in homes that passing the delivery route, this in order to improve service quality and optimization resources, such as personnel, economic costs and time.

8 Acknowledgement

This article was done under the direction of Dr. Carlos Alberto Ochoa Ortiz and Dr. José Alberto Hernández, thanks for your patience, time and dedication, the support provided and knowledge they shared me.

Thanks to my family and friends who supported me.

9 References

1. A. Duarte, “Introducción a la optimización”. In *Metaheurísticas*, Melendez, Ed. DYKINSON, Madrid España 2007, pp. 1,17-18.
2. A. Rodriguez, “”, in *Grafos - software para la construcción, edición y análisis de grafos*, Bubok Publishing S.L., España 2010, pp. 104-106.
3. Baptista, F. & Tavares J., Bio-inspired Algorithms for the Vehicle Routing Problem, Ed. Springer, USA 2009, pp. 35-40.
4. INEGI, Panorama sociodemográfico de Morelos. México 2011.
5. G. B. Dantzig and J. H. Ramser. The truck dispatching Problem. Operations Research, Management Sciences, 1959.
6. Golden B, Raghavan S. & Wasil E., The Vehicle Routing Problem: Latest Advances and New Challenges, Springer, Italia, vol. 2008921562, pp. 3-4, 2008.
7. Robusté F., “Colonias of ants”, in Logística del transporte, Ed. UPC, España 2005, p. 84.
8. Vazirani V, “Bin Packing”, in *Approximation algorithms*, Springer, USA 2003, pp. 74-76.
9. Yang M., “Approximation Schemes for bin Packing”, in *Encyclopedia of Algorithm*s, vol. 978-0-387-30162-4, p. 58, 2008.
10. Correos de México, www.correosdemexico.gob.mx/Tarifas/TCorreos/Paginas/Individual.aspx, “Tarifas”, April 2015
11. El financiero, www.elfinanciero.com.mx/empresas/correos-de-mexico-suma-ingresos-por-mas-de-mil-mdp-en-2014.html, “Correos de México logra ingresos récord en 2014”, 01 de January 2015
12. Beade A & Garcia E, PROFECO, http://www.profeco.gob.mx/encuesta/brujula/bruj_2013/bol264_Servs_paqueteria_mensajeria.asp, “Parcel and courier services”, September 2013